SPINDLE NOSE: A-6	PART NO: 09303

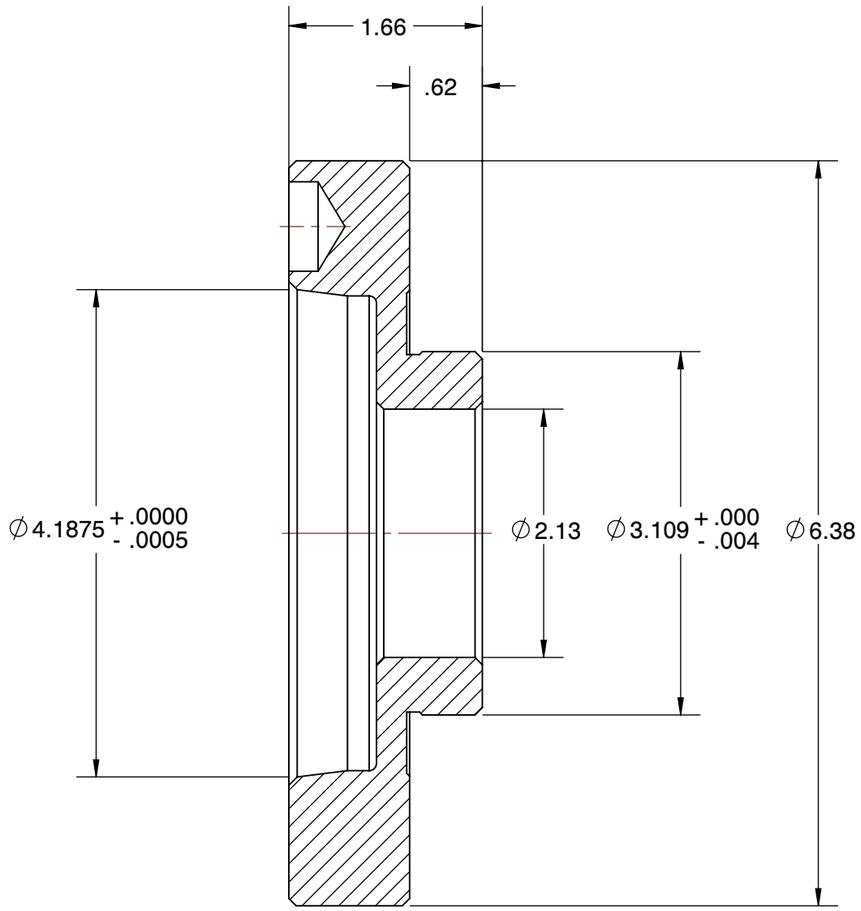

SECTION A-A

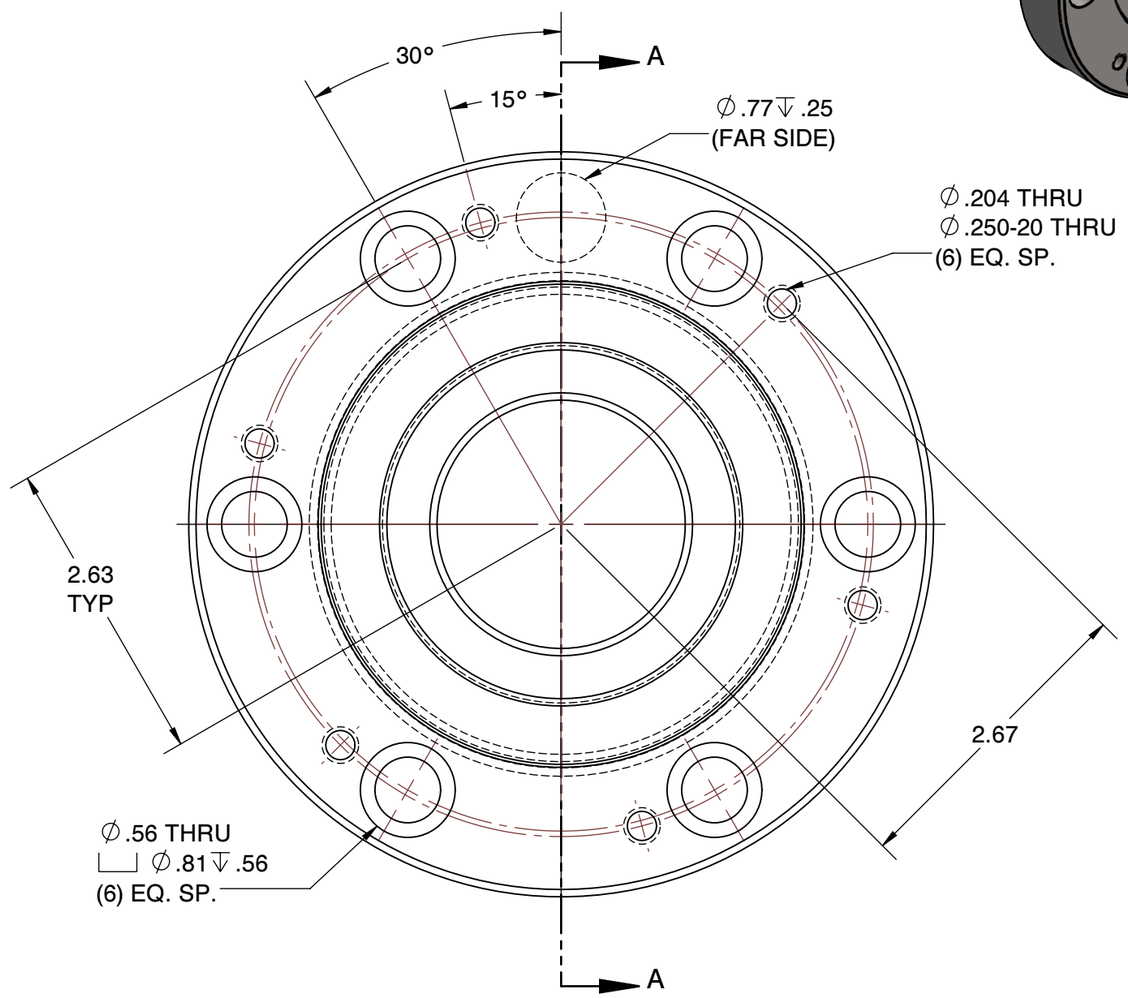

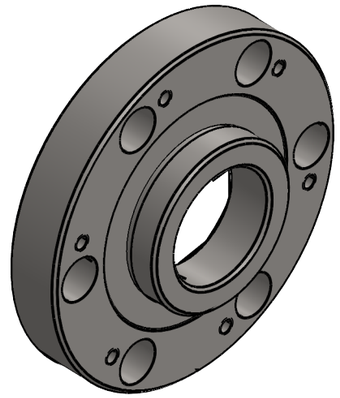

SPEEDGRIP CHUCK CO.
2000 Industrial Parkway
Elkhart IN, 46516, USA
PH: 574-294-1506

MOUNTING PLATES
LOW PROFILE

SCALE	NTS
UNIT	INCH
SHEET	1 of 1

This file and any associated information and specifications are provided for reference and evaluation purposes only, and is subject to change without notice. SPEEDGRIP CHUCK CO. makes representations, warranties or guarantees as to the appropriateness, accuracy, completeness, or suitability for any purpose, of the file, information or specifications.
You are solely responsible for the use of the file, information or specifications.